COUNTERPOINT WITH ROSETTES

18" C/C BACK-TO-BACK PULL

Product Code: L.46.114-18

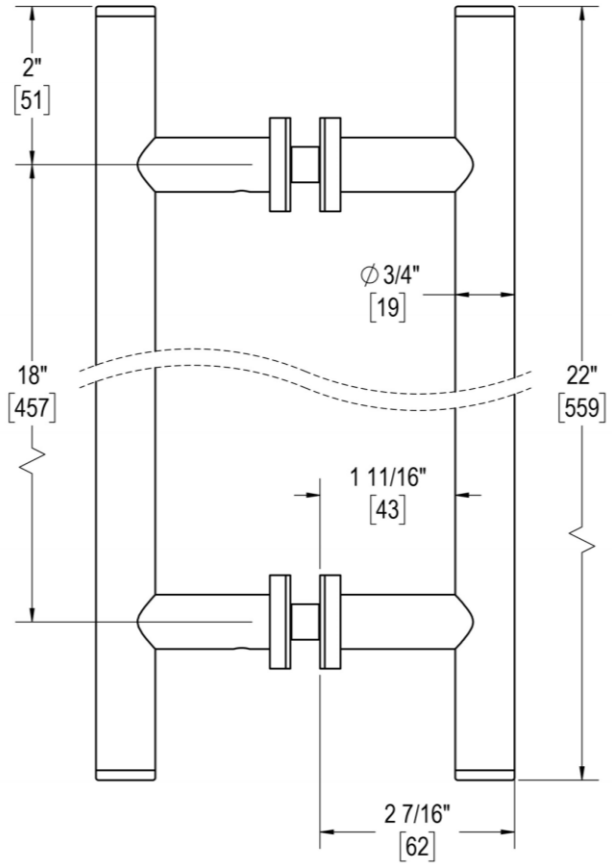

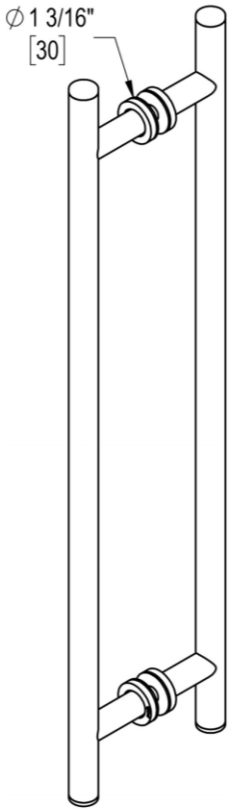

MATERIALS

Solid & tubular brass components, stainless steel fasteners, and clear polyurethane washers

FUNCTION DETAILS & PRODUCT NOTES

- Product design coordinates with other shower & bathroom hardware in the Counterpoint suite.
- Decorative rosettes provide additional design detail and cover any glass defects around the holes.

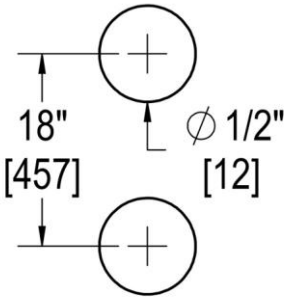

CARE & MAINTENANCE

Portals products should be cleaned with water and dried with a soft cloth. Use of harsh or abrasive chemicals may harm finish and will void the warranty.

WARRANTY

Lifetime warranty for residential use covers defects in material and workmanship of this product.

TEMPLATE & INSTALLATION NOTES

Item requires glass fabrication according to template above and should only be used with tempered safety glass.

Glass Thickness	1/4" [6 mm] to 1/2" [12 mm]
Hole Diameter	1/2" [12 mm]